CHLOE DIVERTER MIXER

PRODUCT CODE: T889B

This modern range is suitable for a medium range budget. This style is simple with curved features and rounded handle thinning out at the end.

FEATURES:

- / Round plate
- / Diverts from bath to shower with ease
- / Quality Chrome Finish
- / 40mm cartridge
- / Popular contemporary design

WARRANTY: 15 Year Warranty*

AVAILABLE IN CHROME

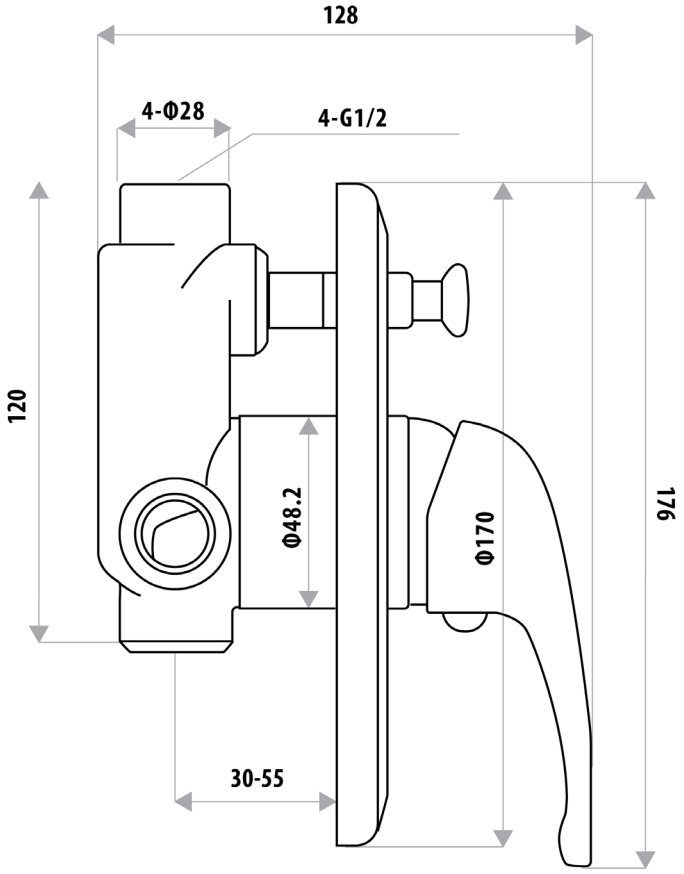

P 02 9912 5900 • **F** 02 9912 5912 • linkware@ozemail.com.au
33 Liberty Road, Huntingwood NSW 2143 • www.linkwareint.com